DESCHNER

KINECHEKS®

SPEED REGULATORS FOR MOVING DEVICES

DESCHNER®
FLUID POWER

Bulletin S-66

KINECHEKS®

LEAKPROOF HYDRAULIC CHECKS FOR SPEED REGULATION OF MOVING DEVICES

COMPACT & POWERFUL

KINECHEKS are unequalled for controlling the speed of both light and heavy loads. They are available in stroke lengths of 1/2 inch, 1 inch, 2 inch, 3 inch, 4 inch and 6 inch with capacities from 2 1/2 lbs. to 1200 lbs. force. There are no sliding seals or heavy springs to make the plunger bind or jerk, so KINECHEKS give smooth consistent control of moving devices whether the force is 2 1/2 lbs. or 1200 lbs. Leakproof KINECHEKS have more capacity, can be operated in any position, are extremely small in size and require no external fluid reservoir. A KINECHEK can do more work for a longer period that any other hydraulic check — and it's more dependable.

EASY TO INSTALL

This handy push plunger check is installed simply by mounting it with the plunger butted against the device to be controlled and turning the adjustment knob to the required setting. It is very easy to adjust the KINECHEK to your exact needs because the range of adjustment is 300° with a very gradual and smooth rate of change. The speed of the load pushing on the plunger is held uniform throughout the entire plunger stroke. The plunger automatically extends when the load is removed.

VERSATILE

A KINECHEK may be used to precisely regulate the speed or feed rate of any moving device. Use it to control the speed of air cylinder piston rods, automatic machine slides and carriages; to regulate the feed of drills, grinders, and cutting tools; or to remove chatter and lost motion from any equipment.

LEAKPROOF

The KINECHEK is a remarkable hydraulic unit. It is hermetically sealed and may be operated in any position for millions of cycles. It will not leak even a drop of fluid a year (unless damaged) — therefore fluid replenishment is never needed. KINECHEK units stay clean and are excellent for use on food processing equipment, business machines, medical and optical equipment, and automatic production machinery.

PRECISION DESIGN

KINECHEKS are guaranteed to provide millions of trouble-free cycles without noticeable wear. All KINECHEKS contain a tool steel cylinder that is hardened to Rockwell 60c, honed to a mirror finish, and precisely mated to a special alloy *all metal* piston. This combination is virtually impossible to wear out.* All parts are made with exacting perfection, and the plunger rod end is hardened for maximum service life. A patented rolling diaphragm seal provides leakproof, frictionless sealing of the plunger rod and makes a KINECHEK unsurpassed for smooth, dependable, constant speed control.

**There are no sliding seals.*

CONSTANT SPEED

CONSTANT SPEED month after month is an important characteristic of KINECHEKS. They are more precise in movement than conventional checks because the super-clean silicone fluid they contain is sealed in for life and filtered every stroke. No dirt, dust or lint can contaminate the fluid — therefore the internal flow aperture never silts and causes variation in plunger speed as it does in checks with sliding seals or those refilled periodically with non-too-clean hydraulic oil. Added to this is the advantage that silicone fluid is more constant in viscosity than ordinary hydraulic oil, so that speed variations in KINECHEKS (due to temperature changes) are almost imperceptible. A KINECHEK is your answer when you need an efficient and reliable timer, as well as an accurate speed control.

NO MAINTENANCE NECESSARY

KINECHEKS do not require periodic replenishment of fluid because there are no sliding seals to leak, wear or contaminate the internal fluid. KINECHEK rolling diaphragm seals successfully withstand endurance tests of 10,000,000 cycles without leaking. These tests insure that the KINECHEK will operate for millions of cycles without noticeable wear. An integral rod wiper protects the seal and other internal parts of the KINECHEK from contamination by cutting oils, moisture and dust. All moving parts are permanently lubricated and contribute to an extremely long life without maintenance.

You can install a KINECHEK and forget it!

CONSTANT SPEED/FEED CONTROL

KINECHEKS®

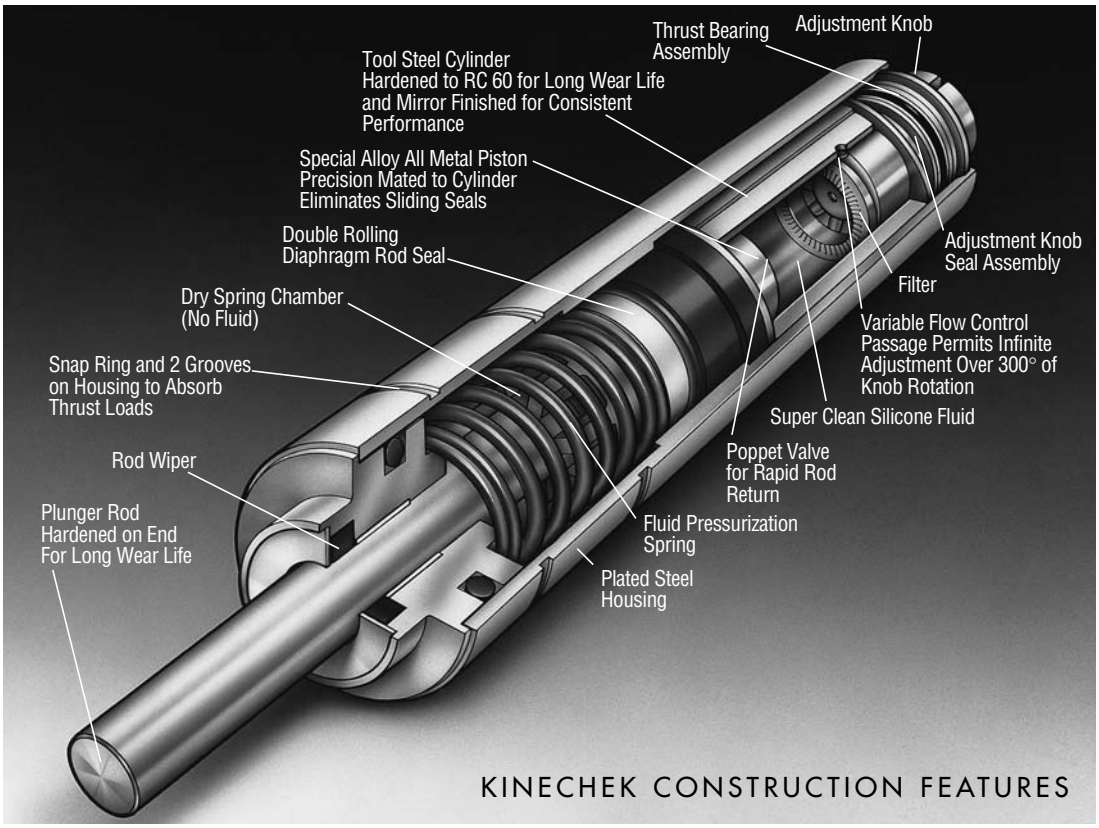

KINECHEKS, originated by Deschner Corporation in 1961, represent a "state of the art" advancement in hydraulic feed control. The adjacent cutaway view illustrates many of the design features in a typical Slimline model KINECHEK. All KINECHEK models contain these same quality features, although parts arrangement will vary from model to model. Each and every KINECHEK is thoroughly tested and must meet rigid performance standards before it is approved for shipment. This is your assurance of receiving the highest possible product quality.

SLIMLINE

The SLIMLINE KINECHEK is the original hydraulic check that has set the industry standards for compactness, reliability and constancy in feed control. It is available in stroke lengths of 1/2 inch, 1 inch, 2 inch and 3 inch; all with a 1200 lb. maximum capacity. The wide selection of models described on pages 5 and 6 will provide a solution to most of your motion control problems.

SKIPCHEK

SLIMLINE KINECHEKS can be provided with a skip feature which allows controlled feed movements to be separated with a fast feed (skip) interval. The SKIPCHEK® reduces machining times when drilling tubular sections, clevis parts, etc. Each SKIPCHEK is tailor-made to the users specifications and is available in 1/2 inch, 1 inch, 2 inch and 3 inch stroke models. Pages 13 and 14 provide design and ordering information for this model.

SUPER K

This KINECHEK model provides the advantages of a long 4 inch or 6 inch operating stroke within a short overall length. Maximum capacity of this model is 1200 lbs. Pages 9 and 10 provide specification and dimensional information for this model.

MINI K

This smallest KINECHEK provides the advantages of a precise hydraulic feed control in an extremely small size. Leak proof and fully adjustable, the KINECHEK MINI K is available in 1/2 inch, 1 inch and 1 1/4 inch stroke lengths with a maximum capacity of 400 lbs. See pages 7 and 8 for specification and dimensional information.

PECKCHEK

PECKCHEK® clutching is available for deep hole peck drilling. Contact factory for information on this and any other special needs. Ask for bulletin S-62.

KINECHEKS®

CUSHION-START

The CUSHION-START® KINECHEK is a combination impact absorber and hydraulic check. The impact absorbing feature called "Cushion-Start" is a safeguard for those applications where a fast moving machine element must be abruptly decelerated, then permitted to continue its movement at a constant speed. The first portion of the unit's stroke is used for cushioning, while the remaining stroke will control the speed of any load with the same uniformness as regular Kinecheks. The cushioning feature is normally supplied only in the SLIMLINE family of units. See pages 11 and 12 for specification and dimensional information on this model.

SLOW RETURN

The SLOW RETURN KINECHEK will control the speed of a load pushing on the plunger rod exactly the same as a regular KINECHEK. However, the automatic return action of the plunger rod is slowed by a fixed restricting orifice added to the unit's internal flow passages. The time required for the plunger rod to extend ranges from 6 seconds to 22 seconds per inch of stroke for the models listed. This return time depends upon the orifice size built into the unit. Other times are available upon request. This feature is very helpful where automatic extension of the plunger rod would interfere with a second operation. Pages 11 and 12 provide specification and dimensional information on this model.

MOUNTING ARRANGEMENTS

FIGURE 1

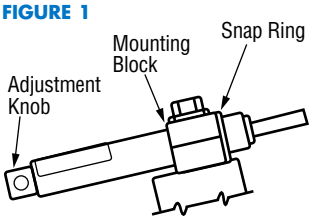

Mount on flat surfaces with mounting block at either snap ring groove or between snap ring grooves. Thrust is taken by snap ring furnished.

FIGURE 2

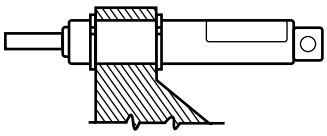

Can be mounted in round holes and retained by snap rings in light duty installations. If application is severe, body should be clamped radially by split mounting to prevent body working in hole. Set screws must not be used.

IMPORTANT

FIGURE 5

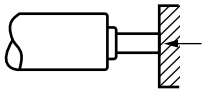

End of Kinechek plunger is hardened for wear resistance, and should, whenever possible, be butted directly against any straight moving body. Load should never slide on end of plunger or cause plunger to twist during its stroke.

FIGURE 6

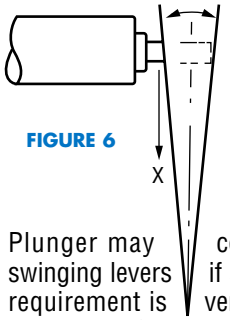

Plunger may contact swinging levers if service requirement is very light. Angularity of lever must not put a right angle load on plunger at X greater than the maximum values shown in the chart below.

MAXIMUM RIGHT ANGLE LOAD AT X:

Kinechek Model	Stroke	Max. Load
Mini K	1/2, 1 or 1 1/4	4 lbs.
Slimline	1/2 or 1	20 lbs.
Slimline	2 or 3	10 lbs.
Super K	4 or 6	10 lbs.

FIGURE 7

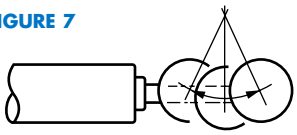

However, for longest life with swinging levers, install roller on lever so *roller contacts flat end of plunger* during entire stroke of plunger. Rollers A10131 and A10331, illustrated in figures 3 and 4, are suitable for this purpose.

Safety Stop – For quickest plunger return after a working stroke, and to protect KINECHEK, provide a solid stop to stop the moving load approximately 1/32" before KINECHEK plunger reaches bottom of its own stroke.

ROLLER (ACCESSORIES)

FIGURE 3

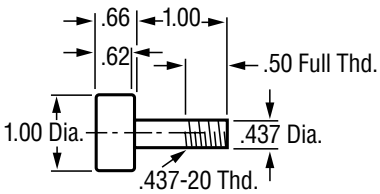

Cantilever Roller No. A10131

FIGURE 4

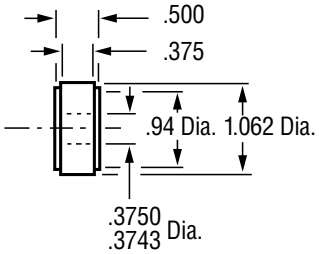

Roller No. A10331

KINECHEKS®

TYPICAL KINECHEK APPLICATIONS

KINECHEKS are very adaptable and are used in a wide variety of applications. Please consult factory if you have any questions regarding the use of a KINECHEK in your application.

FIGURE 8

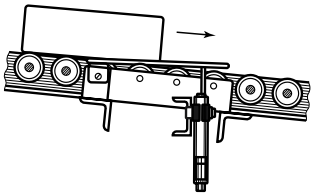

KINECHEK stops load moving on conveyor, then allows load to continue after KINECHEK plunger is depressed.

FIGURE 9

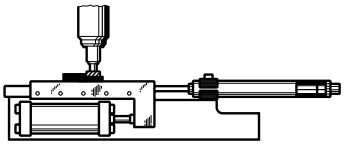

CUSHION-START KINECHEK cushions, then controls feed rate of slide operated by an air cylinder.

FIGURE 10

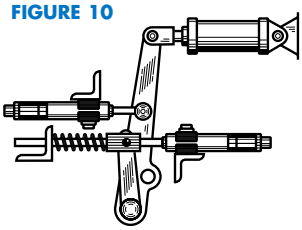

Upper unit controls speed of air cylinder. Lower unit slows return of spring operated lever.

FIGURE 11

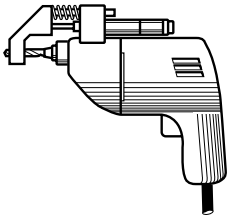

KINECHEK MINI K used to control feed rate of hand held drill.

FIGURE 12

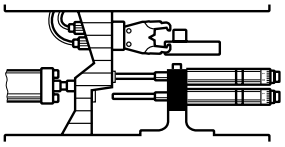

Two KINECHEK SUPER K units permit fast insertion by robot with slow completion of operation.

FIGURE 13

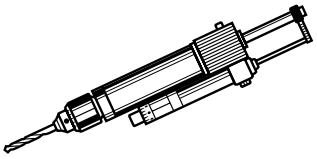

Drilling machine controlled with KINECHEK may be operated in any position.

Every hydraulic unit is fully guaranteed against defects in workmanship or material. Within one year from the date of shipment to the original purchaser, any unit which has proven defective will be repaired without charge, F.O.B. factory, when unit is shipped prepaid to factory. The Company is not responsible for any damage resulting from tampering, abuse, or incorrect application.

The Company's liability on any claim of any kind including negligence, for any loss or damage arising out of, connected with or resulting from the design, manufacture, sale, delivery, resale, installation or installation advice, inspection, repair, operation, or use, of any equipment described herein shall in no case exceed the price allocable to the equipment which gives rise to the claim, and shall terminate four years after the date of original shipment. The purchaser, by acceptance of any of the Company's products described herein, assumes all liability of the consequence of the use of those products.

PATENTS ISSUED OR PENDING ON ALL UNITS DESCRIBED HEREIN. KINECHEK®, CUSHION-START, PECKCHEK, SKIPCHEK AND DESCHNER LOGOTYPE ARE REGISTERED TRADEMARKS OF DESCHNER CORP. BULLETIN S-66 ©1998

KINECHEKS®

SLIMLINE

SLIMLINE

The SLIMLINE KINECHEK is the original hydraulic check that has set the industry standards for compactness, reliability and constancy in feed control. It is available in stroke lengths of 1/2 inch, 1 inch, 2 inch and 3 inch; all with a 1200 lb. maximum capacity. The wide selection of models described below will provide a solution to most of your motion control problems. Please contact factory if you have requirements for thrust loads greater than 1,200 lbs.

SPECIFICATIONS

1	2	3	4	5	6	7	8	9		
Model No. of Kinechek Slimline	**Description**	**Stroke**	**Minimum Force That Will Operate Plunger Full Stroke**	**Plunger Return Spring Force**	**Time Req'd for Plunger to Return Outward if Released Suddenly**	**Load That Will Push Plunger 1 in. Per Sec. at Fastest Adjustment**	**Load That Will Push Plunger 4 in. Per Sec. at Fastest Adjustment**	**Time for Full Stroke of Plunger at Slowest Adjustment**		
								1000 lb. Load	**500 lb. Load**	**100 lb. Load**
1001-31-1/2	extra fast	1/2 in.	5 lbs.	4 lbs.	.015 sec.	6 lbs.	10 lbs.	0.5 sec.	1 sec.	5 sec.
1003-31-1/2	fast				.020 sec.	9 lbs.	19 lbs.	4 sec.	9 sec.	50 sec.
1002-31-1/2	standard				.031 sec.	11 lbs.	33 lbs.	8 sec.	18 sec.	150 sec.
1004-31-1/2	slow speed				.186 sec.	30 lbs.	90 lbs.	38 sec.	90 sec.	12.5 min.
1001-31-1	extra fast	1 in.	5 lbs.	4 lbs.	.030 sec.	6 lbs.	10 lbs.	1 sec.	2 sec.	10 sec.
1003-31-1	fast				.041 sec.	9 lbs.	19 lbs.	8 sec.	18 sec.	100 sec.
1002-31-1	standard				.063 sec.	11 lbs.	33 lbs.	15 sec.	35 sec.	5 min.
1004-31-1	slow speed				.378 sec.	30 lbs.	90 lbs.	75 sec.	180 sec.	25 min.
1001-31-2	extra fast	2 in.	5 lbs.	4 lbs.	.052 sec.	6 lbs.	10 lbs.	2 sec.	5 sec.	20 sec.
1003-31-2	fast				.070 sec.	9 lbs.	19 lbs.	15 sec.	35 sec.	200 sec.
1002-31-2	standard				.106 sec.	11 lbs.	33 lbs.	30 sec.	70 sec.	10 min.
1004-31-2	slow speed				.730 sec.	30 lbs.	90 lbs.	150 sec.	6 min.	50 min.
1001-31-3	extra fast	3 in.	5 lbs.	4 lbs.	.115 sec.	6 lbs.	10 lbs.	3 sec.	7 sec.	30 sec.
1003-31-3	fast				.155 sec.	9 lbs.	19 lbs.	23 sec.	55 sec.	5 min.
1002-31-3	standard				.235 sec.	11 lbs.	33 lbs.	45 sec.	105 sec.	15 min.
1004-31-3	slow speed				1.620 sec.	30 lbs.	90 lbs.	225 sec.	9 min.	75 min.

Capacity: 1200 lbs. Maximum – Including Impact When Load Strikes Plunger

135˚F Maximum Continuous Operating Temperature

DIMENSIONS AND WEIGHTS

Model No.	Stroke	Weight	A	B	C
1_ _ _-31-1/2	1/2 in.	11.5 oz.	6.33	.687	4.28
1_ _ _-31-1	1 in.	12.5 oz.	7.83	1.187	5.28
1_ _ _-31-2	2 in.	16.5 oz.	10.87	2.187	7.31
1_ _ _-31-3	3 in.	19.2 oz.	13.87	3.187	9.31

FIGURE 14

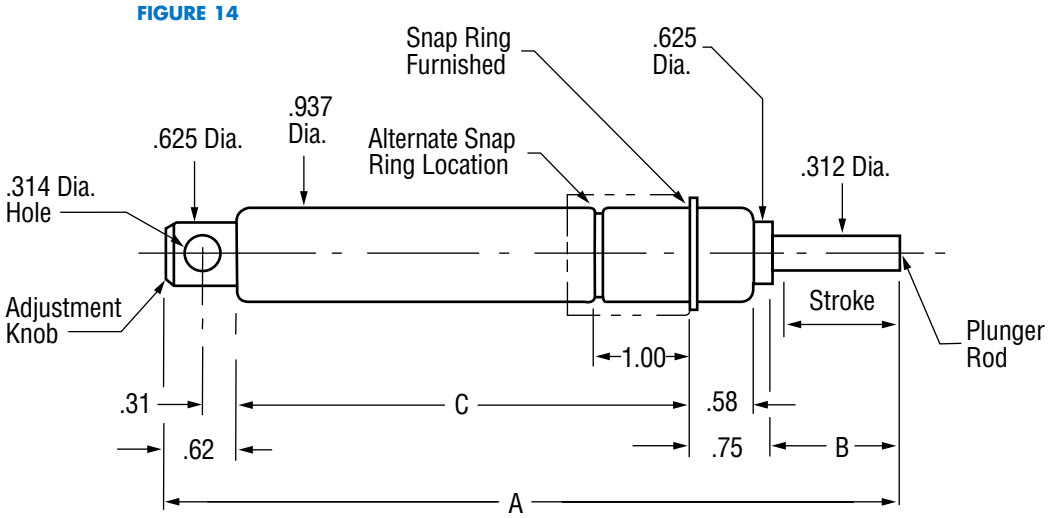

KINECHEK SLIMLINE (MODEL 1_ _ _)

MOUNTING BLOCK NO. A10031 (SLIMLINE)

FIGURE 15

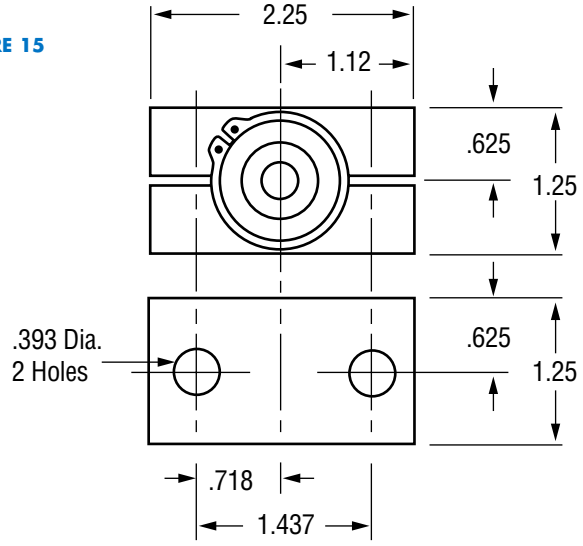

KINECHEKS®

Mini K

MINI K

This smallest KINECHEK provides the advantages of a precise hydraulic feed control in an extremely small size. Leak proof and fully adjustable, the KINECHEK MINI K is available in 1/2 inch, 1 inch, and 1 1/4 inch stroke lengths with a maximum capacity of 400 lbs.

SPECIFICATIONS

1	2	3	4	5	6	7	8	9			
Model No. of Kinechek Mini K	Description	Stroke	Minimum Force That Will Operate Plunger Full Stroke	Plunger Return Spring Force	Time Req'd for Plunger to Return Outward if Released Suddenly	Load That Will Push Plunger 1 in. Per Sec. at Fastest Adjustment	Load That Will Push Plunger 4 in. Per Sec. at Fastest Adjustment	Time for Full Stroke of Plunger at Slowest Adjustment			
								300 lb. Load	150 lb. Load	75 lb. Load	25 lb. Load
3021-19-1/2	extra fast	1/2 in.	2.5 lbs.	2 lbs.	.05 sec.	2.5 lbs.	3.5 lbs.	0.5 sec.	1 sec.	2 sec.	6 sec.
3023-19-1/2	fast				.08 sec.	2.8 lbs.	4 lbs.	3 sec.	6 sec.	12 sec.	36 sec.
3022-19-1/2	standard				.18 sec.	3 lbs.	5 lbs.	6 sec.	12 sec.	24 sec.	72 sec.
3024-19-1/2	slow speed				1.1 sec.	5 lbs.	9 lbs.	30 sec.	60 sec.	120 sec.	360 sec.
3021-19-1	extra fast	1 in.	2.5 lbs.	2 lbs.	.09 sec.	2.5 lbs.	3.5 lbs.	1 sec.	2 sec.	4 sec.	12 sec.
3023-19-1	fast				.13 sec.	2.8 lbs.	4 lbs.	6 sec.	12 sec.	24 sec.	72 sec.
3022-19-1	standard				.32 sec.	3 lbs.	5 lbs.	12 sec.	24 sec.	48 sec.	144 sec.
3024-19-1	slow speed				1.9 sec.	5 lbs.	9 lbs.	60 sec.	120 sec.	240 sec.	720 sec.
3021-19-1 1/4	extra fast	1 1/4 in.	2.5 lbs.	2 lbs.	.12 sec.	2.5 lbs.	3.5 lbs.	1.2 sec.	2.5 sec.	5 sec.	15 sec.
3023-19-1 1/4	fast				.17 sec.	2.8 lbs.	4 lbs.	7.5 sec.	15 sec.	30 sec.	90 sec.
3022-19-1 1/4	standard				.42 sec.	3 lbs.	5 lbs.	15 sec.	30 sec.	60 sec.	180 sec.
3024-19-1 1/4	slow speed				2.5 sec.	5 lbs.	9 lbs.	75 sec.	150 sec.	300 sec.	900 sec.
3021-19-1 1/2	extra fast	1 1/2 in.	2.5 lbs.	2 lbs.	.15 sec.	2.5 lbs.	3.5 lbs	1.5 sec.	3 sec.	6 sec.	18 sec.
3023-19-1 1/2	fast				.21 sec.	2.8 lbs.	4 lbs.	9 sec.	18 sec.	36 sec.	108 sec.
3022-19-1 1/2	standard				.51 sec.	3 lbs.	5 lbs	18 sec.	36 sec.	72 sec.	216 sec.
3024-19-1 1/2	slow speed				3.0 sec.	5 lbs.	9 lbs.	90 sec.	180 sec.	360 sec.	1080 sec.

Capacity: 400 lbs. Maximum – Including Impact When Load Strikes Plunger

135˚F Maximum Continuous Operating Temperature

DIMENSIONS AND WEIGHTS

Model No.	Stroke	Weight	A	B	C	D
3_ _ _ -19-1/2	1/2 in.	3.25 oz.	4.22	.625	.72	.63
3_ _ _ -19-1	1 in.	3.70 oz.	5.72	1.125	.72	.63
3_ _ _ -19-1 1/4	1 1/4 in.	5.3 oz.	6.58	1.375	.72	.63
3_ _ _ -19-1 1/2	1 1/2 in.	5.6 oz.	7.08	1.625	.97	.88

Figure 16

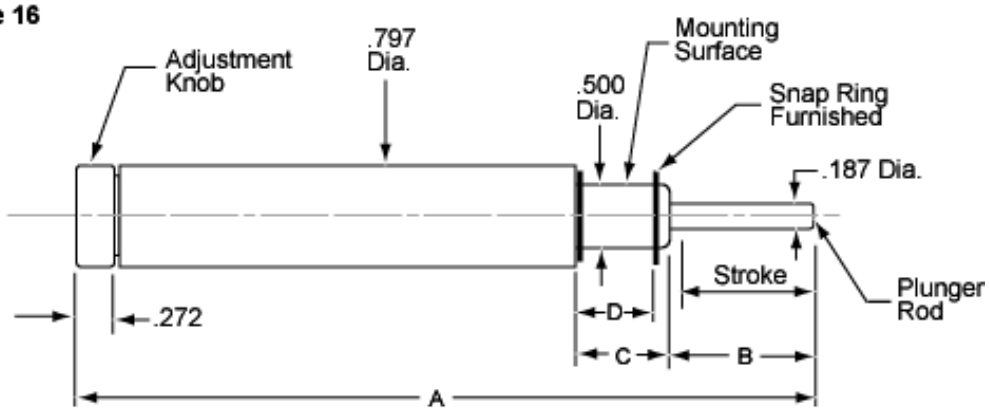

KINECHEK MINI K (MODEL 3_ _ _)

FIGURE 17

MOUNTING BLOCK NO. A10531 (MINI K)

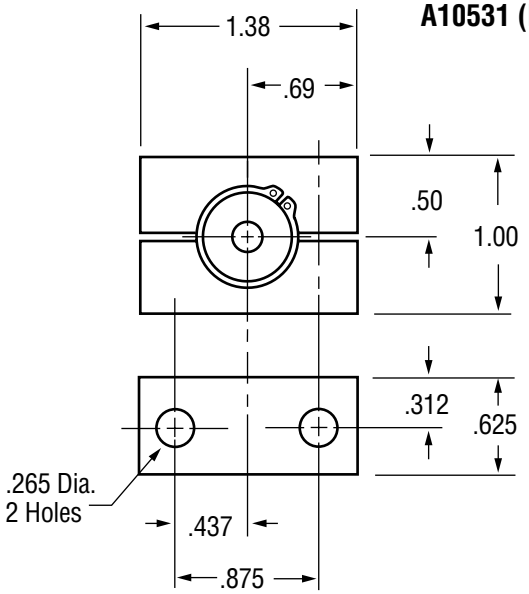

KINECHEKS®

Super K

SUPER K

This Kinechek model provides the advantages of a long 4 inch or 6 inch operating stroke within a short overall length. Maximum capacity of this model is 1200 lbs.

SPECIFICATIONS

1	2	3	4	5	6	7	8	9		
Model No. of Kinechek Super K	**Description**	**Stroke**	**Minimum Force That Will Operate Plunger Full Stroke**	**Plunger Return Spring Force**	**Time Req'd for Plunger to Return Outward if Released Suddenly**	**Load That Will Push Plunger 1 in. Per Sec. at Fastest Adjustment**	**Load That Will Push Plunger 4 in. Per Sec. at Fastest Adjustment**	**Time for Full Stroke of Plunger at Slowest Adjustment**		
								1000 lb. Load	**500 lb. Load**	**100 lb. Load**
5001-31-4	extra fast	4 in.	5 lbs.	4 lbs.	.14 sec.	6 lbs.	10 lbs.	4 sec.	10 sec.	40 sec.
5003-31-4	fast				.19 sec.	9 lbs.	19 lbs.	30 sec.	70 sec.	6.5 min.
5002-31-4	standard				.36 sec.	11 lbs.	33 lbs.	60 sec.	140 sec.	20 min.
5004-31-4	slow speed				1.87 sec.	30 lbs.	90 lbs.	5 min.	12 min.	100 min.
5001-37-6	extra fast	6 in.	8 lbs.	7 lbs.	.25 sec.	9 lbs.	12 lbs.	6 sec.	15 sec.	60 sec.
5003-37-6	fast				.33 sec.	10 lbs.	20 lbs.	45 sec.	105 sec.	10 min.
5002-37-6	standard				.65 sec.	12 lbs.	33 lbs.	90 sec.	3.5 min.	30 min.
5004-37-6	slow speed				2.39 sec.	30 lbs.	90 lbs.	7.5 min.	18 min.	150 min.

Capacity: 1200 lbs. Maximum – Including Impact When Load Strikes Plunger

135°F Maximum Continuous Operating Temperature

DIMENSIONS AND WEIGHTS

Model No.	Stroke	Weight	A	B	C	D	E	F
5_ _ _-31-4	4 in.	23.2 oz.	14.03	4.187	2.00	.312	None	None
5_ _ _-37-6	6 in.	31.5 oz.	19.27	6.187	3.50	.375	1.00	1.00

FIGURE 18

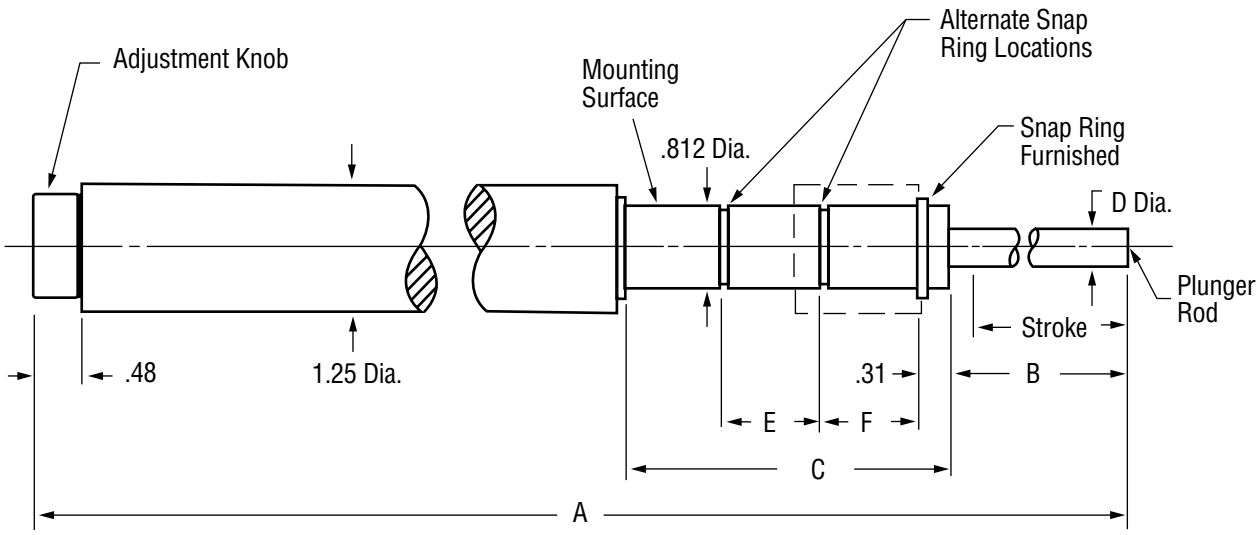

KINECHEK SUPER K (MODEL 5_ _ _)

FIGURE 19

MOUNTING BLOCK NO. A10431 (SUPER K)

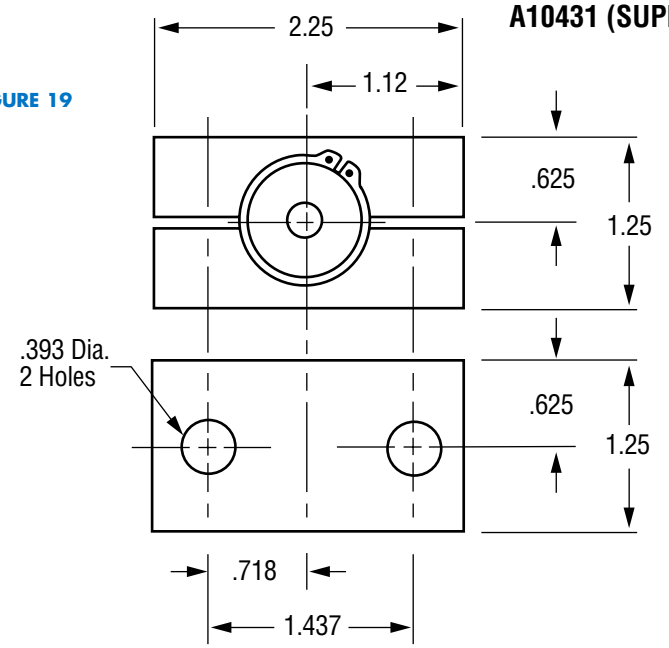

CUSHION-START • SLOW RETURN

CUSHION-START KINECHEKS

The CUSHION-START® KINECHEK is a combination impact absorber and hydraulic check. The impact absorbing feature called "CUSHION-START" is a safeguard for those applications where a fast moving machine element must be abruptly decelerated, then permitted to continue its movement at a constant speed. The first portion of the unit's stroke is used for cushioning, while the remaining stroke will control the speed of any load with the same uniformness as regular KINECHEKS. The CUSHION-START feature is normally supplied only in the SLIMLINE family of units. The data on the specification chart, column 4, indicates the kinetic (moving) energy that the CUSHION-START can gently decelerate before beginning the constant speed portion of the stroke.

SLOW RETURN KINECHEKS

The SLOW RETURN KINECHEK will control the speed of a load pushing on the plunger rod exactly the same as a regular KINECHEK. However, the automatic return action of the plunger rod is slowed by a fixed restricting orifice added to the unit's internal flow passages. The time required for the plunger rod to extend ranges from 6 seconds to 22 seconds per inch of stroke for the models listed. This return time depends upon the orifice size built into the unit. Other times are available upon special request. The time ranges listed for each model on the Specification Chart, Column 7, are necessary to accommodate manufacturing tolerances, since the restricting orifice is not adjustable.

SPECIFICATIONS

1	2	3	4	5	6	7	8	9	10		
Model No. of Kinechek	**Description**	**Stroke**	**Max. Energy Absorption Capacity Per Stroke**	**Minimum Force That Will Operate Plunger Full Stroke**	**Plunger Return Spring Force**	**Time Req'd for Plunger to Return Outward if Released Suddenly**	**Load That Will Push Plunger 1 in. Per Sec. at Fastest Adjustment**	**Load That Will Push Plunger 4 in. Per Sec. at Fastest Adjustment**	**Time for Full Stroke of Plunger at Slowest Adjustment**		
CUSHION-START Capacity: 1200 lbs. Max. – Including Impact When Load Strikes Plunger									**1000 lb. Load**	**500 lb. Load**	**100 lb. Load**
1102-31-1/2	.18 in. Cushion	1/2 in.	60 in. lbs.	5 lbs.	4 lbs.	.031 sec.	11 lbs.	33 lbs.	5 sec.	11 sec.	96 sec.
1102-31-1	.25 in. Cushion	1 in.	120 in. lbs.			.063 sec.			11 sec.	26 sec.	3.7 min.
1102-31-2	.34 in. Cushion	2 in.	220 in. lbs.			.106 sec.			24 sec.	58 sec.	8.3 min.
1102-31-3	.62 in. Cushion	3 in.	260 in. lbs.			.235 sec.			35 sec.	83 sec.	11.8 min.
SLOW RETURN Capacity: 1200 lbs. Max. – Including Impact When Load Strikes Plunger									**1000 lb. Load**	**500 lb. Load**	**100 lb. Load**
1302A-31-1/2 1302B-31-1/2 1302C-31-1/2		1/2 in.		5 lbs.	4 lbs.	6 to 10* 10 to 16* 16 to 22*	11 lbs.	33 lbs.	8 sec.	18 sec.	150 sec.
1302A-31-1 1302B-31-1 1302C-31-1		1 in.		5 lbs.	4 lbs.	6 to 10* 10 to 16* 16 to 22*	11 lbs.	33 lbs.	15 sec.	35 sec.	5 min.
1302A-31-2 1302B-31-2 1302C-31-2		2 in.		5 lbs.	4 lbs.	6 to 10* 10 to 16* 16 to 22*	11 lbs.	33 lbs.	30 sec.	70 sec.	10 min.
1302A-31-3 1302B-31-3 1302C-31-3		3 in.		5 lbs.	4 lbs.	6 to 10* 10 to 16* 16 to 22*	11 lbs.	33 lbs.	45 sec.	105 sec.	15 min.

135°F Maximum Continuous Operating Temperature (All models)

*Outward Return Rate of Plunger at Slowest Adjustment (Seconds per inch of Stroke)

CUSHION-START • SLOW RETURN

DIMENSIONS AND WEIGHTS

Model No.	Stroke	Weight	A	B	C
1_ _ _-31-1/2	1/2 in.	11.5 oz.	6.33	.687	4.28
1_ _ _-31-1	1 in.	12.5 oz.	7.83	1.187	5.28
1_ _ _-31-2	2 in.	16.5 oz.	10.87	2.187	7.31
1_ _ _-31-3	3 in.	19.2 oz.	13.87	3.187	9.31

FIGURE 20

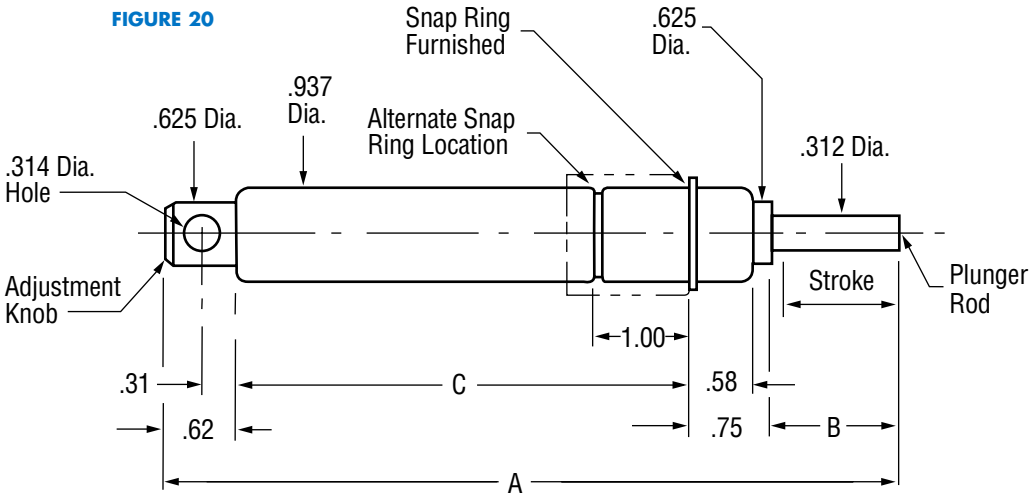

KINECHEK CUSHION-START AND SLOW RETURN

MOUNTING BLOCK NO. A10031 (SLIMLINE)

FIGURE 21

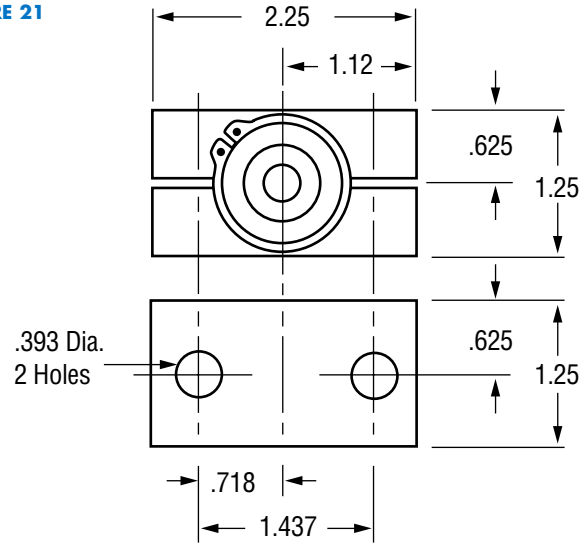

SKIPCHEK®

SKIPCHEK

SLIMLINE KINECHEKS can be provided with a SKIPCHEK feature in 1/2 inch, 1 inch, 2 inch and 3 inch stroke models. The fast feed (skip) interval reduces machining times when it is desired to line drill tubular sections, clevis parts etc.

The skip feature is accomplished by adding a "by-pass" flow passage to the cylinder, thus permitting the SKIPCHEK to advance with minimal resistance over the duration of the passage. Each unit is tailor made to the user's specifications. Since Deschner SKIPCHEKS avoid the complexity of added moving parts and seals, the user will benefit by receiving the long service life associated with all Kinecheks.

A design sheet is provided on page 14 to assist in establishing the information necessary for us to manufacture the SKIPCHEK. Part Numbers will be assigned after your requirements are finalized.

The skip function is usually furnished in either of two styles as follows:

STYLE S (C.F. + F.F. + C.F.):
Controlled feed followed by a fast forward and then a return to a controlled feed for the balance of the stroke. This style is usually utilized for drilling tubing, clevis joints or any application requiring 2 holes in line with a space between the holes.

STYLE N (C.F. +F.F.):
Controlled feed followed by a fast forward for the balance of the stroke. This style has been used for combined drilling and tapping or on special applications.

Note: C.F. means controlled feed and F.F. means fast forward (skip).

1	2	3	4	5	6	7	8		
Model No. of Kinecheks Skipchek *** Designate Style "S" or "N"** ****C.F. and F.F. Requirement (See Design Information)**	**Stroke**	**Minimum Force That Will Operate Plunger Full Stroke**	**Plunger Return Spring Force**	**Time Req'd for Plunger to Return Outward if Released Suddenly**	**Load That Will Push Plunger 1 in. Per Sec. at Fastest Adjustment**	**Load That Will Push Plunger 4 in. Per Sec. at Fastest Adjustment**	**C.F. at Slowest Adjustment**		
							1000 lb. Load	**500 lb. Load**	**100 lb. Load**
1002__*-31-1/2(__ __ C.F./__ __F.F.)**	1/2 in.	5 lbs.	4 lbs.	.031 sec.	11 lbs.	33 lbs.	.067 in./sec.	.029 in./sec.	.0033 in./sec.
1002__*-31-1 (__ __ C.F./__ __F.F.)**	1 in.			.063 sec.					
1002__*-31-2 (__ __ C.F./__ __F.F.)**	2 in.			.106 sec.					
1002__*-31-3 (__ __ C.F./__ __F.F.)**	3 in.			.235 sec.					

Capacity: 1200 lbs. Maximum – Including Impact When Load Strikes Plunger

135°F Maximum Continuous Operating Temperature

Stroke	Weight	A	B	C
1/2 in.	11.5 oz.	6.33	.687	4.28
1 in.	12.5 oz.	7.83	1.187	5.28
2 in.	16.5 oz.	10.87	2.187	7.31
3 in.	19.2 oz.	13.87	3.187	9.31

Note: SKIPCHEKS may be used with Model A10031 mounting block. See page 6 for mounting block dimensions.

FIGURE 22

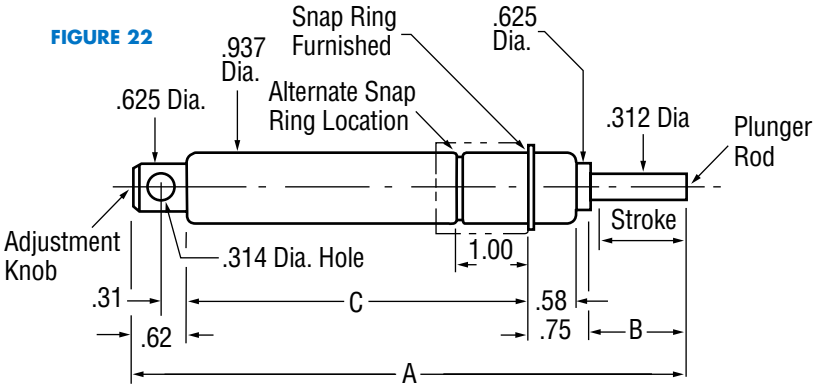

DESIGN INFORMATION

SKIPCHEK SPECIFICATIONS

1. 1st C.F. _____+.062/–.000 in. (_____+1.6/–0.0 mm.)

2. F.F. _____+.000/–.062 in. (_____+0.0/–1.6 mm.)

3. Total SKIPCHEK stroke_____in._____(mm.) Nominal

4. Drill thrust_____lbs. (_____kg.)
   SKIPCHEK will be tested at 150 lbs (68 kg.) if no thrust load is specified.

REFERENCE DATA

5. Round tube: Yes _____No_____
   If yes: O.D. _____in. (_____mm.)
   wall thickness _____in. (_____mm.)

6. If work material is not round tubing:
   Specify: Thickness of 1st section _____in. (_____mm.)
   Distance between sections_____in. (_____mm.)
   Thickness of 2nd section_____in. (_____mm.)

7. Drill Dia. _____in. (_____mm.)
   Point angle_____degrees (included)

8. C.F. Feed Rate_____in./min.(_____mm./min) (if known)

Specification items 1 thru 3 are mandatory information we must have. Item 4 will not have an appreciable effect unless thrust loads exceed 350 lbs. Items 5 thru 8 are for the users consideration to be sure all aspects have been considered including part curvature, drill point height etc. The transition tolerances shown on the design sheet are necessary and must also be allowed for when establishing specifications.

Note: C.F. means controlled feed. F.F. means fast forward (skip).

Note: Drill point height, transition tolerances and part curvature (if any) should be considered when establishing specifications. Completion of the reference data will assist in establishing 1st C.F. and F.F. specifications. (Transition tolerances increase C.F. or decrease F.F. as shown.)

FIGURE 23

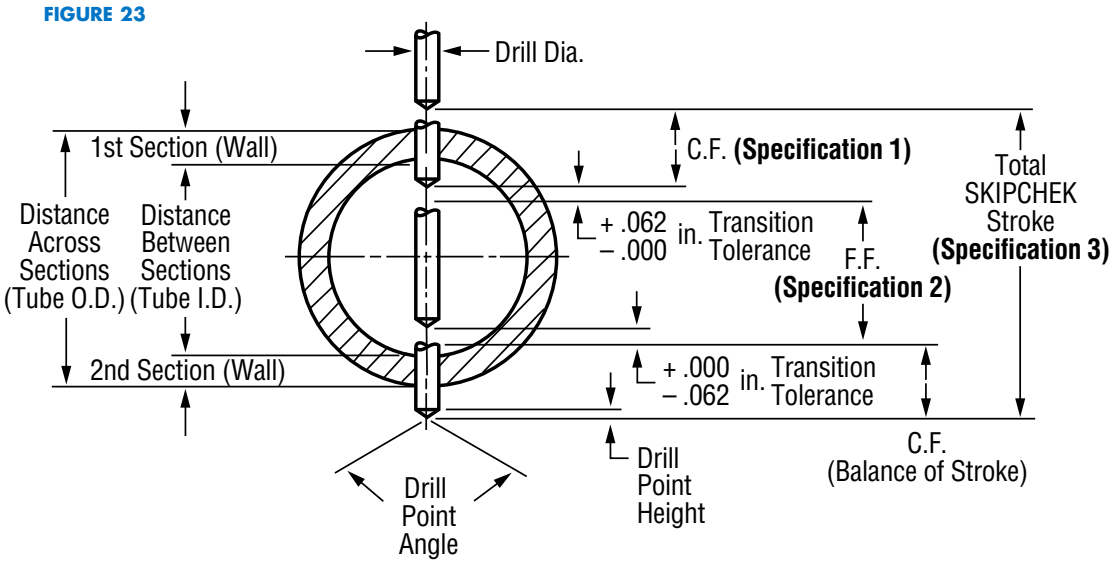

DESCHNER CORPORATION
3211 West Harvard Street
Santa Ana, California 92704

Telephone: (714) 557-1261
Out of State: Toll Free 1 (800) 457-6666
Fax: (714) 557-4762
Website: www.deschner.com
E-mail: info@deschner.com

© Bulletin S-66 2/1/04